GEA Filtration

Membrane Filtration

Model U Membrane Filtration Pilot Plant

The Model U membrane filtration pilot plant is a flexible unit used to perform pilot studies on the full range of membrane filtration technologies (MF, UF, NF and RO) under a wide range of operating conditions.

The pilot plant's standard configuration allows for testing with spiral polymeric membranes. It can also be equipped with other membrane configurations including ceramic and tubular.

The plant is specially designed for continuous, semi-automatic mode of operation to simulate a multi-stage production plant. The plant can also be run in batch mode or semi-batch mode.

The Model U membrane filtration pilot plant is skid mounted and will be delivered with all the components required for quick installation and easy operation, including an operating manual with data sheet templates.

Standard Features

- Six, sanitary, spiral membrane housings
  - one membrane element per housing
  - 3.8" diameter, sanitary design elements
- 30 gallon tank
- Control loops
  - feed flow/pressure
  - temperature
  - tank level
  - concentrate ratio control
- Motor starters
  - variable frequency drive for feed pump
  - on/off starters for recirculation pumps
- Flow indicators
  - three, permeate rotameters
  - one, feed magmeter
  - one, concentrate magmeter
- Pressure and temperature gauges
- Four heat exchangers (1m^2)
- Pressure relief valve
- 316L stainless steel construction
- Skid mounted

Operating Conditions

• Membrane Area	
- Spiral	4 to 42m^2
• Permeate Capacity	
- Spiral	20 - 200 gallons/hour
• Pressure	up to 600 psig
• Temperature	up to 200° F

Optional Features

- 1,000 psig operating capability
- Industrial, spiral membrane housings
- Tubular polymeric membrane housings
- Other membrane configurations
- Pretreatment equipment
  - screens and depth filters
  - chemical feed systems
- Diafiltration
- Add 4th stage

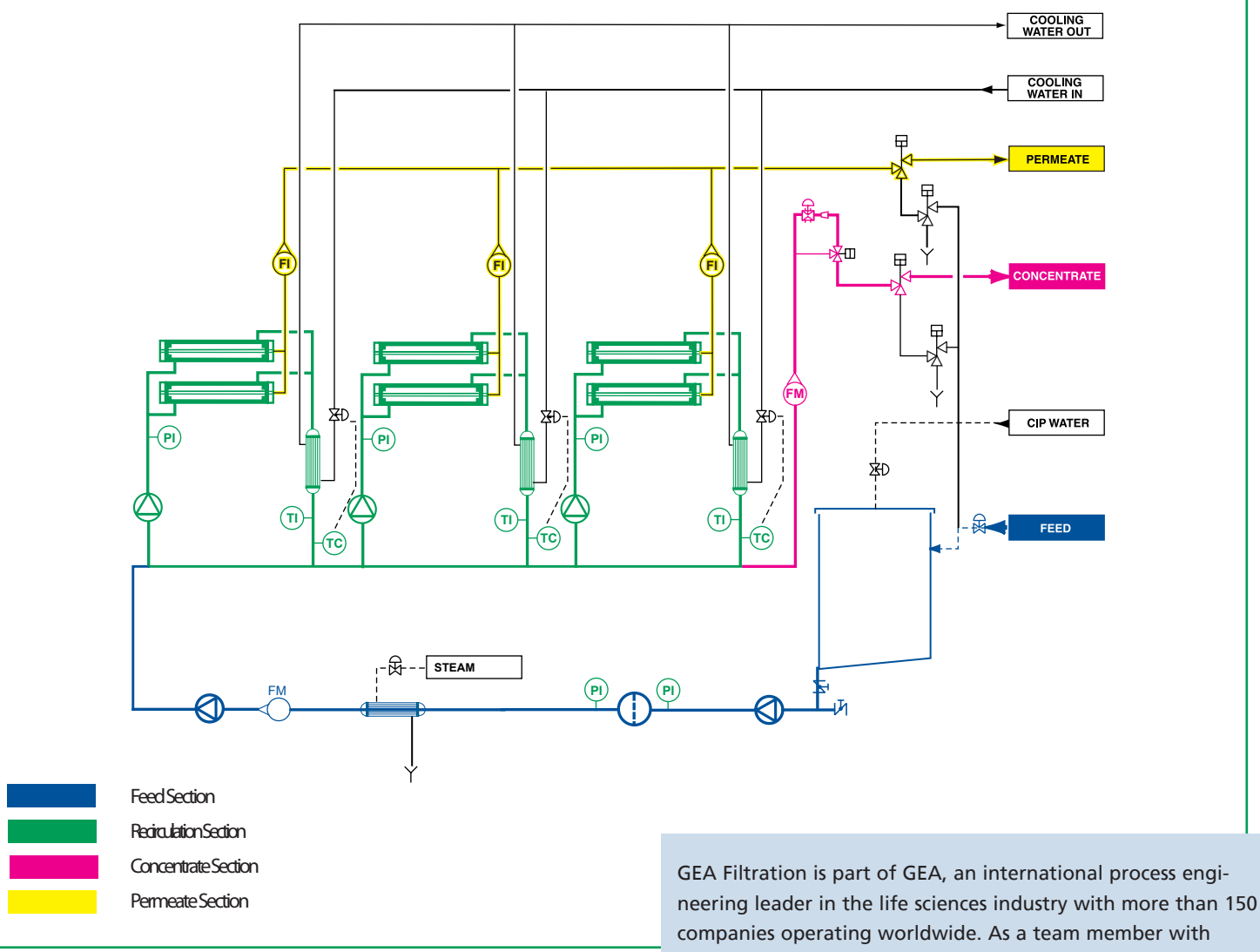

Utility Requirements

• Power	230/460 V, 3 phase, 60 Hz
• Electric Service	50 amps/460V
• Plant Air	80 psig, oil-free
• Line Size	3/8”
• Cooling Water	10 gpm, 60° F
• Steam	500 pph, 50 psi
• CIP Water	20-30 gpm
• Seal Water	2-5 gpm

GEA Filtration is part of GEA, an international process engineering leader in the life sciences industry with more than 150 companies operating worldwide. As a team member with other technology leaders within the group, GEA Filtration is uniquely positioned to provide both customized membrane filtration plants as well as complete process lines specifically tailored to each customer’s individual needs and requirements.

GEA Filtration is world renowned for its design of the most advanced cross-flow membrane filtration systems available, namely Reverse Osmosis (RO), Nanofiltration (NF), Ultrafiltration (UF) and Microfiltration (MF). We also offer a wide range of system configurations and membrane types to provide the customer with the most technically proficient and cost effective solution for each application.

For more information on the capabilities of our pilot plants, consult our website at www.geafiltration.com.

GEA Process Engineering Inc. • 9165 Rumsey Road • Columbia, MD 21045
Tel: 410-997-8700 • Fax: 410-997-5021 • Email: gea.pe.na@geagroup.com
GEA Process Engineering Inc. • 1600 O'Keefe Road • Hudson, WI 54016
Tel: 715-386-9371 • Fax: 715-386-9376 • Email: gea.pe.na@geagroup.com
Web: www.niroinc.com